SAFETY WITHOUT COMPROMISE

SERIES 660

Water Drain Valve

PROTECTOSEAL

- Sizes 2" through 6"
- Drain and remove excess water from tank
- Simple, one hand valve operation
- Two stage opening and closing
- Padlock bracket prevents unauthorized opening of valve
- Non-freeze design
- Factory tested for positive shut-off

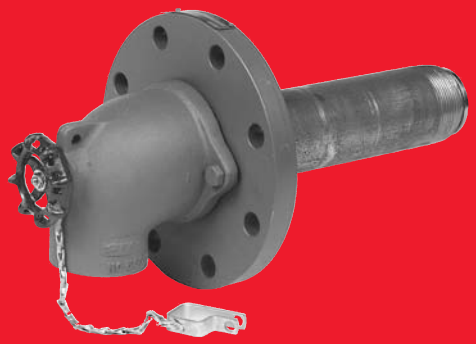

SERIES 660

OBJECTIVE

Protectoseal Series 660 Water Drain Valves are designed to provide maximum flow and assure complete, self-draining action when relieving tanks of water accumulated during normal tank breathing.

TECHNIQUE

The Series No. 660 Water Drain Valve is mounted to the tank flange connection. Swivel-type outlet spout permits proper downward positioning after the valve has been installed on the tank. Turning the handwheel opens the main valve and then the poppet valve at the inboard side. Closing of the valve occurs in the reverse sequence. Should rust or other foreign matter accumulate in the valve seats, it can usually be dislodged by pushing in on the handwheel and unseating the inboard poppet while the main seat is open. This creates a flushing action which will normally remove any foreign matter. When hand pressure is released, inboard poppet will reseat automatically. If dip pipe is to be used, valve should be equipped with a proper bell reducer to assure adequate flow. Outlet spout is threaded to permit piping away of liquids.

Cat. No.	Bell Reducer	Dip Pipe
662F	1½" x 2½" NPT	2½" NPT
663F	1½" x 2½" NPT	2½" NPT
664F	2½" x 3" NPT	3" NPT
666F	3½" x 4" NPT	4" NPT

SPECIAL FEATURES

Easy Inspection and Maintenance. Design and light weight of entire unit permits easy convenient handling for inspection and maintenance. Exposed main valve seal facilitates inspection and replacement of valve seal, if necessary, while tank is in service.

Non-Freeze Design. Unique, non-freeze design with "true" straight-through body construction assures maximum flow and complete self-draining action.

Low Leakage. FEP film thrust bearing is used in bonnet to minimize leakage around the stem when the valve is opened. This permits piping away the discharge of the valve or taking pump suction on the valve outlet in order to assist in emptying a tank if necessary.

Numerous Sizes Available. All sizes, 2" though 6" mate with standard 150# ANSI raised face flange connections.

Quality Assurance. All valves are 100% factory tested for positive shut-off and conformance with Protectoseal's high standards of quality assurance.

CONSTRUCTION

Series	Body	Trim	Seal
660F	Steel	Stainless Steel	TFE

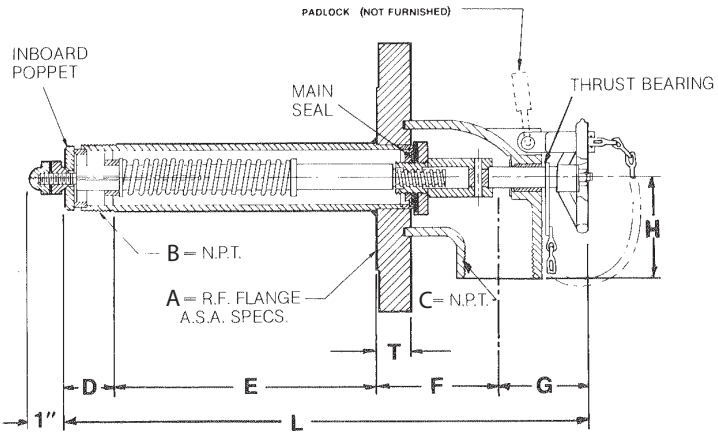

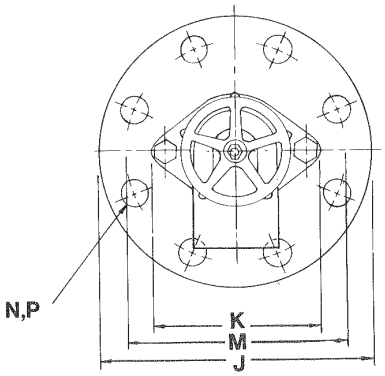

DIMENSIONS & ORDERING INFORMATION *(Dimensions shown are for reference only, contact factory for certified drawings.)*

Cat. No.	Flange A	Pipe B	Pipe C	D	E	F	G	H	J	K	L	B.C. M	Holes N	Dia. P	T
662F	2"	1 1/2"	1 1/2"	1 1/16"	7 1/2"	3 1/2"	2 1/2"	2 3/4"	6"	4 5/8"	14 9/16"	4 3/4"	4	3/4"	15/16"
663F	3"	1 1/2"	1 1/2"	1 1/16"	7 1/2"	3 1/2"	2 1/2"	2 3/4"	7 1/2"	4 5/8"	14 9/16"	6"	4	3/4"	15/16"
664F	4"	2 1/2"	2"	1 5/8"	9 1/16"	4 3/16"	3"	3 1/4"	9"	5 15/16"	17 7/8"	7 1/2"	8	3/4"	15/16"
666F	6"	3 1/2"	3"	1 3/4"	9"	4 3/4"	3 3/8"	4 1/4"	11"	7 3/4"	18 7/8"	9 1/2"	8	7/8"	1"

ADDITIONAL PRODUCTS FROM PROTECTOSEAL

Series 18540

Pipe-Away Pressure Vacuum Relief Vent for applications that require hazardous vapors be processed into manifolded piping and not released into the atmosphere.

Series 7800

Emergency Vent protects tanks against rupture or explosion resulting from excessive internal pressure caused by exposure to fires.

Series 4950

Vent Line / In-Line Parallel Plate Flame Arrester is designed for installation in open vent pipe or bleed lines from storage or processing tanks. Suitable for NEC Group D (IEC Group IIA) vapors.

Series 830

Combination Pressure / Vacuum Relief Vent & Flame Arrester provides pressure and vacuum relief as well as protection from propagation of externally introduced flames. Suitable for NEC Group D (IEC Group IIA) vapors.

PROTECTOSEAL®
Safety Without Compromise

225 Foster Ave., Bensenville, IL 60106-1690
P 630.595.0800 F 630.595.8059
info@protectoseal.com www.protectoseal.com

©2019 The Protectoseal Company